10c

BLIC. AFFAIRS PAMPHLETS

OMES TO LIVE IN

ZABETH OGG AND HAROLD SANDBANK

DO YOU KNOW

How to make your home attractive at little expense?

What to do if your rooms are crowded?

How to make your own furniture?

PUBLIC AFFAIRS PAMPHLETS
No. 66 1942

Generated on 2021-05-10 23:11 GMT / https://hdl.handle.net/2027/mdp.39015035399347
Public Domain, Google-digitized / http://www.hathitrust.org/access_use#pd-google
Digitized by Google
Original from UNIVERSITY OF MICHIGAN

HN
51
.P8

HOMES TO LIVE IN

By ELIZABETH OGG and HAROLD SANDBANK

HOUSING conditions for most American families have long been far from ideal. The defense program — uprooting and shifting thousands of workers, cutting into the production of building materials and furnishings, raising prices — has not helped matters. Now that America is at war, most of us will have to make the best of the homes we have. If we have to move, we'll make the best of what we can get.

This pamphlet offers some suggestions for doing just that. It may be of help to you who are not altogether content with your present house or apartment, but for one reason or another cannot move. It should also help those of you who have just moved and are in the throes of settling down, and those of you who are planning, despite all the difficulties, to build or buy a home. While it has been prepared primarily for city or town families, many of the suggestions may also be useful to families living in the country.

This pamphlet has drawn on *Principles of Space Planning and Space Organization in Dwelling Units,* a preliminary report of the Subcommittee on Standards of Occupancy of the Committee on the Hygiene of Housing (American Public Health Association), of which Mr. Sandbank was a member, and on his experiences at the Henry Street Settlement Home Planning Center.

Copyright, 1942, by the Public Affairs Committee, Incorporated
-- A nonprofit, educational organization —

Generated on 2021-05-10 23:11 GMT / https://hdl.handle.net/2027/mdp.39015035399347
Public Domain, Google-digitized / http://www.hathitrust.org/access_use#pd-google
Digitized by Google
Original from UNIVERSITY OF MICHIGAN

GETTING THE BEST USE OUT OF ROOMS

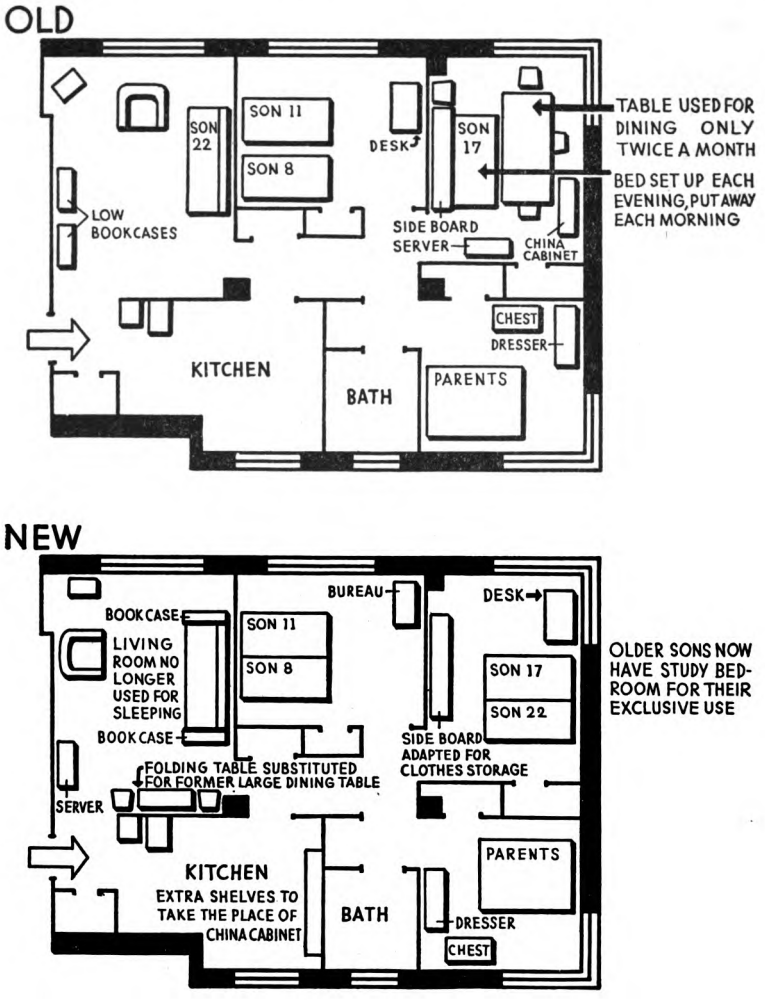

GRAPHIC ASSOCIATES FOR PUBLIC AFFAIRS COMMITTEE, INC.

Generated on 2021-05-10 23:11 GMT / https://hdl.handle.net/2027/mdp.39015035399347
Public Domain, Google-digitized / http://www.hathitrust.org/access_use#pd-google
Digitized by Google
Original from UNIVERSITY OF MICHIGAN

FURNITURE ARRANGEMENT

BAD

1. ENTRANCE CROWDED
2. FURNITURE HAMPERS ACCESS TO CLOSET
3. DESK IN POOR LIGHT
4. SOFA AND BED FACE WINDOWS

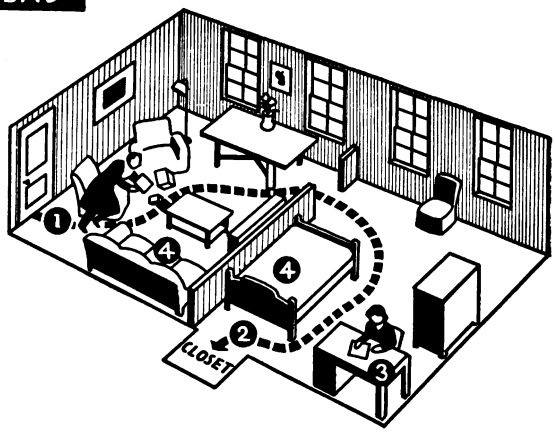

GOOD



1. CLEAR PASSAGE PROVIDED
2. BUREAU AT FOOT OF BED SAVES SPACE
3. BUREAU NEAR CLOSET IS CONVENIENT
4. DESK GETS LIGHT FROM THE LEFT

GRAPHIC ASSOCIATES FOR PUBLIC AFFAIRS COMMITTEE, INC.

Generated on 2021-05-10 23:12 GMT / https://hdl.handle.net/2027/mdp.39015035399347
Public Domain, Google-digitized / http://www.hathitrust.org/access_use#pd-google
Digitized by Google
Original from UNIVERSITY OF MICHIGAN

USE YOUR OWN SKILL AND INGENUITY

IF you can't afford to buy new furniture, or if you can't find exactly what you want, or if you happen to like making things for yourself (and it can be fun), you will go in for building your own pieces or renovating old ones. Here, before we offer any suggestions, a few words of warning may not come amiss.

Words of Warning

Don't be too ambitious, especially if you're a rank amateur at this sort of thing. Before you lay out money for tools, find out if there is a workshop in the neighborhood school or community center which you would be allowed to use. This would not only relieve you of the expense of buying tools, it might also provide instruction and help, and spare your family the mess you would make doing carpentry at home. Don't commit yourself to doing more than one job at first, and let it be a fairly simple one.

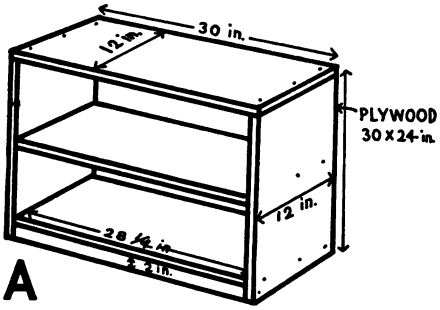

A

Before you go to buy your materials, it is a good idea to lay down a fairly exact plan of the piece you are going to make, covering all the parts and their measurements. You may be able to order from a lumber yard wood cut in the sizes you need. If you can, it will save you a lot of time and trouble.

Making a Bookcase End Table

This pamphlet is too brief for us to be able to give detailed instructions on how to make a number of pieces. In the first sketch (Figure A), therefore, we show how a bookcase end table is constructed, and hope that you can apply the principles illustrated to the building of some of the other pieces we shall mention. The general design of this bookcase is identical,

Generated on 2021-05-10 23:18 GMT / https://hdl.handle.net/2027/mdp.39015035399347
Public Domain, Google-digitized / http://www.hathitrust.org/access_use#pd-google
Digitized by Google
Original from UNIVERSITY OF MICHIGAN

hours wipe off the excess oil, and a couple of days later repeat the process. You can keep repeating it to get the depth of tone you want, provided you let one application of oil soak in thoroughly before applying the next.

Other Pieces You Might Make

Among the following you may find a suggestion or two worth adapting for your own home. Removable shelves for closets and kitchen cupboards where a great deal of space is otherwise wasted are easy to make (Figure B). You nail or screw the shelf to supports of the required height and insert it where it is needed. Stretchers or angle irons under the shelf will keep the supports from buckling. This same design can be used for a bathroom stand to enable a child to reach the bowl. Another handy kitchen aid is a rack designed to hang on a door or a wall (Figure C).

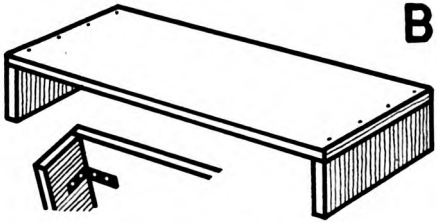
B

For your child you may feel ambitious enough to try your hand at a number of pieces. In building a cabinet for a child's clothes, the main thing is to suit it to the size of the child. He should be able not only to open the door himself but also to reach the hanging rod and hooks. Painting both inside and outside in bright colors will encourage the child to make full use of it. A child's chair which can be turned into a table by tipping it over on its side (Figure D) is a fairly simple proposition. A bench with a detachable lid and interior storage space can be used almost anywhere in the house — as a child's work table, an end table, a seat — providing a place to keep tools or sewing or painting materials as well.

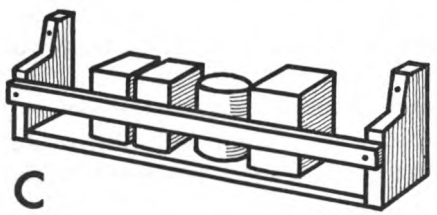
C

Generated on 2021-05-10 23:18 GMT / https://hdl.handle.net/2027/mdp.39015035399347
Public Domain, Google-digitized / http://www.hathitrust.org/access_use#pd-google
Digitized by Google
Original from UNIVERSITY OF MICHIGAN

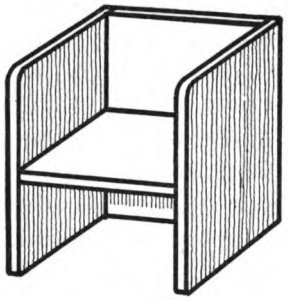

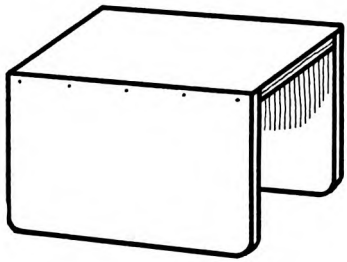

D

Some More Ambitious Proposals

These are all small additions to the home, comparatively simple to make. More difficult are undertakings in the field of major essentials, such as beds, chests, tables, and desks. But the big reward of such undertakings is that you can create your own design — the exact size that fits your space best, the height that is most comfortable for you, the sort of fittings, such as drawers or shelves, that are best for the things you have to store. You can also design furniture to do double duty, or to fill some special requirement which no conventional piece could ever fill.

One way of dealing with a bed in a living room is to build a storage unit across the back of it, standing astraddle the bed on its own two side supports. This should be about the height of the usual sofa back. Made to open with two or three doors, it can be used for storing blankets, sheets, or other accessories. During the day, part of the bed is pushed in under the storage unit, and the part left sticking out is about sofa width and quite comfortable to sit on with the storage unit as a backrest. At night the bed can be pulled out completely and used for two people to sleep in (Figure E).

When living rooms have to be used for sleeping, chests for storing clothes may become something of a problem. There may not be sufficient wall space to allow for all the things you need in your living room, plus a day bed, *and* a fair-sized chest. A good idea then is to build one which can be placed across one end of the day bed and serve as an end table. A low type of chest will look better than a high one for this purpose, made the width of the bed, or perhaps, a little less. Whether you

Generated on 2021-05-10 23:18 GMT / https://hdl.handle.net/2027/mdp.39015035399347
Public Domain, Google-digitized / http://www.hathitrust.org/access_use#pd-google
Digitized by Google
Original from UNIVERSITY OF MICHIGAN

make it with drawers or with doors opening on to a series of shelves will depend on what you want to keep in it.

Built-In Furniture

In building furniture, the main thing is to take your family's needs into account, just as in choosing a house or apartment or in selecting furniture. When you think of building in furniture or equipment, however, other considerations enter in. How long do you expect to stay in your present quarters? Will you find it feasible to take the built-in facilities out and use them elsewhere? Will the landlord permit you to do so?

E

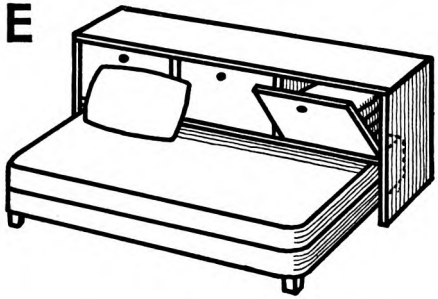

If you feel reasonably sure of staying put, or are willing to take the risk of investing your time and money by building in facilities which you may later have to leave behind, you may be interested in some of the following suggestions.

Shelves built into an alcove make use of space which is otherwise often wasted. Hanging shelves and cupboards save floor space. Light ones may be hung on picture hooks, heavier ones on brackets bolted solidly into the wall.

A closet unit made to fit the space below shorter garments, like jackets and blouses, may contain shelves for shoes and a compartment for soiled linen. Similarly, shelves or cabinets combined with radiator covers can provide useful storage space and at the same time improve the appearance of a broken-up wall area, making it look like a single unit (Figure F). Be sure the cover doesn't block off the heat, and don't keep your best books right next to the radiator.

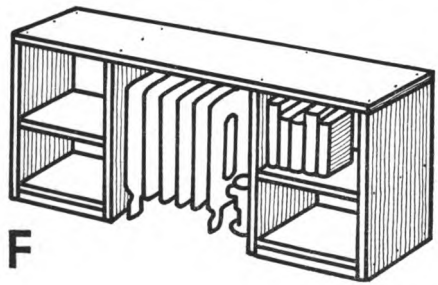

F

Generated on 2021-05-10 23:19 GMT / https://hdl.handle.net/2027/mdp.39015035399347
Public Domain, Google-digitized / http://www.hathitrust.org/access_use#pd-google
Digitized by Google
Original from UNIVERSITY OF MICHIGAN

A corner bench with seats to lift up on hinges goes well in kitchen or dinette in conjunction with the dining table, and likewise provides space for storing blankets, or other things which are not constantly needed. And a folding table built against the wall offers additional work or eating space in the kitchen, or serves as a study table in a child's bedroom, and still preserves the maximum of navigating space when it is not in use (Figure G).

New Furnishings Out of Old

Ideas for renovating furnishings are many. We have space to mention only a few here. Making large, old pieces of furniture fit into small, modern homes is often difficult. An outsize chest of drawers can sometimes be cut in two, the top half then being set up on legs or a stand of its own. The bottom half can be finished with a new flat top.

Extremely ornate chests whose trimmings collect dust and take up, perhaps, just that extra amount of space which is enough to make a room inconvenient, can be streamlined. Saw off flush with the sides any overhang there may be at the top, remove any pieces which have been applied purely for ornament and which are not essential parts of the structure, apply paint or varnish remover and scrape off the finish on what is left, sandpaper and refinish in whatever style you prefer. If you like a modern style, you can also remove the old drawer handles and substitute the long rolling-pin type.

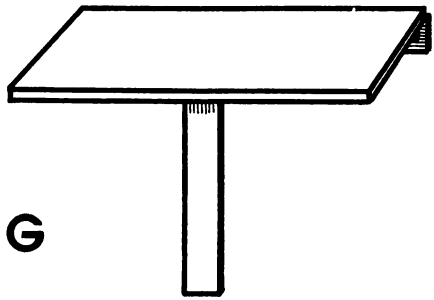

G

Old-fashioned kitchen chairs with high backs and broad seats that hang over the legs can be revamped to look up-to-date. Saw off the back flush with the second bar from the top, and the overhang of the seat flush with the legs, scrape, sand, and refinish. You will then have something like a modern dining-room chair. Or you can cut down the legs and make it into a child's chair.

Generated on 2021-05-10 23:19 GMT / https://hdl.handle.net/2027/mdp.39015035399347
Public Domain, Google-digitized / http://www.hathitrust.org/access_use#pd-google
Digitized by Google
Original from UNIVERSITY OF MICHIGAN

PUBLIC AFFAIRS PAMPHLETS

1. Income and Economic Progress
4. Security or the Dole?
5. Credit for Consumers
6. The South's Place in the Nation
8. This Question of Relief
10. Doctors, Dollars, and Disease
12. Farmers Without Land
14. Saving Our Soil
17. Why Women Work
19. Can America Build Houses?
24. Behind the Syphilis Campaign
25. Machines and Tomorrow's World
26. How Good Are Our Colleges?
27. Who Can Afford Health?
28. Our Taxes and What They Buy
30. Schools for Tomorrow's Citizens
32. Cooperatives in the U. S.
33. This Problem of Food
34. What Makes Crime?
37. State Trade Walls
38. The Fight on Cancer
39. Loan Sharks and Their Victims
40. Chain Stores—Pro and Con
42. Adrift on the Land
43. Safeguarding Our Civil Liber
44. 59¢ of Your $1
45. How Money Works
46. Pensions After Sixty?
47. America's Children
48. If War Comes . . .
50. Credit Unions
51. Read Your Labels
52. How Shall We Pay for Defen
53. What It Takes To Make Good In College
55. America's Factories
56. What the New Census Means
57. Man Meets Job
58. Labor in the Defense Crisis
59. Guns, Planes, and Your Pocketb
60. Better Nursing for America
61. Instalment Selling—Pros and C
62. How to Buy Life Insurance
63. More for Your Money
64. How to Check Inflation
65. Prostitution and the War
66. Homes to Live In

For quantity rates and list of new titles write:

PUBLIC AFFAIRS COMMITTEE, INC.

30 Rockefeller Plaza New York, N. Y.

Generated on 2021-05-10 23:19 GMT / https://hdl.handle.net/2027/mdp.39015035399347
Public Domain, Google-digitized / http://www.hathitrust.org/access_use#pd-google
Digitized by Google
Original from UNIVERSITY OF MICHIGAN